PRODUCED BY AN AUTODESK EDUCATIONAL PRODUCT

ESC:
1:1

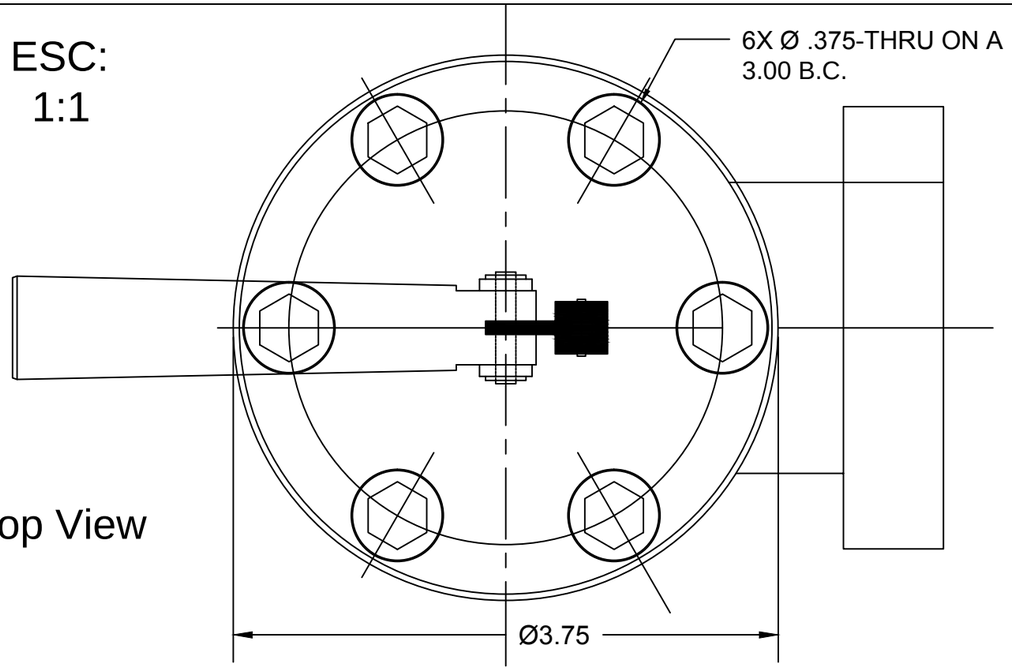

Top View

ESC:
1:2

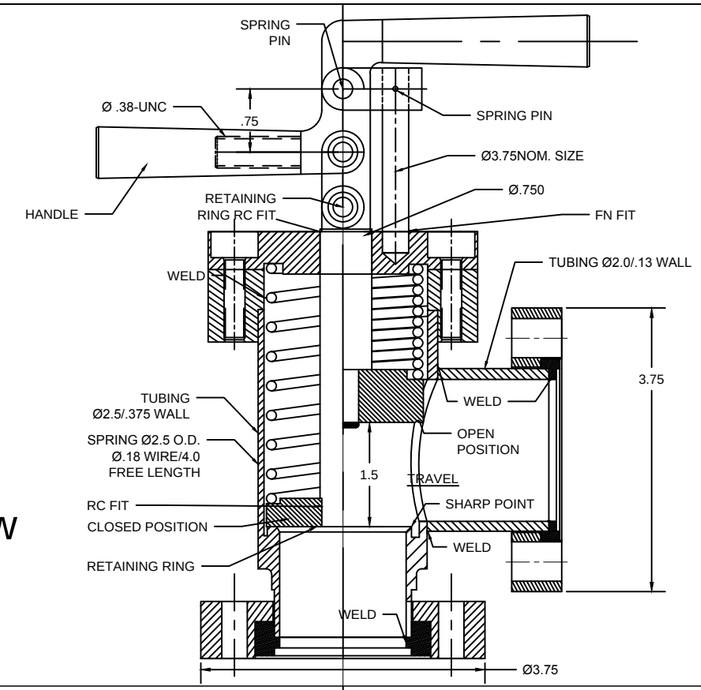

Section View

ESC:
1:2

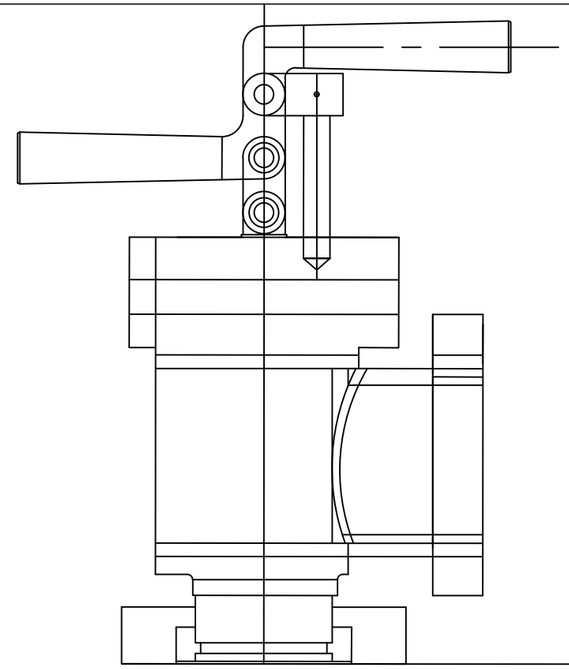

Front View

ESC:
1:2

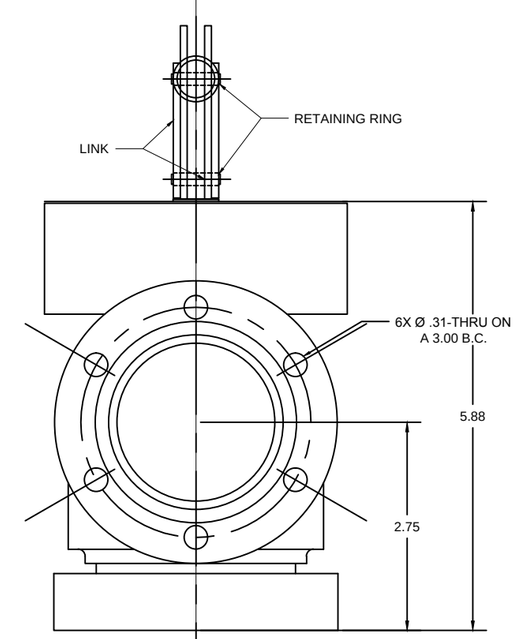

Right view

Digital School	PROJECT: Assembly of Pipe	DRAWN BY: David Tang	COURSE: ECT 310
		CHECKED BY: SOMEONE ELSE	INSTRUCTOR: Dr. Muhib R.
	TITLE: Asg 3	DATE: 3/12/10	REVISION: .
		SCALE: AS NOTED	SHEET: 1 OF 1

PRODUCED BY AN AUTODESK EDUCATIONAL PRODUCT
PRODUCED BY AN AUTODESK EDUCATIONAL PRODUCT
PRODUCED BY AN AUTODESK EDUCATIONAL PRODUCT