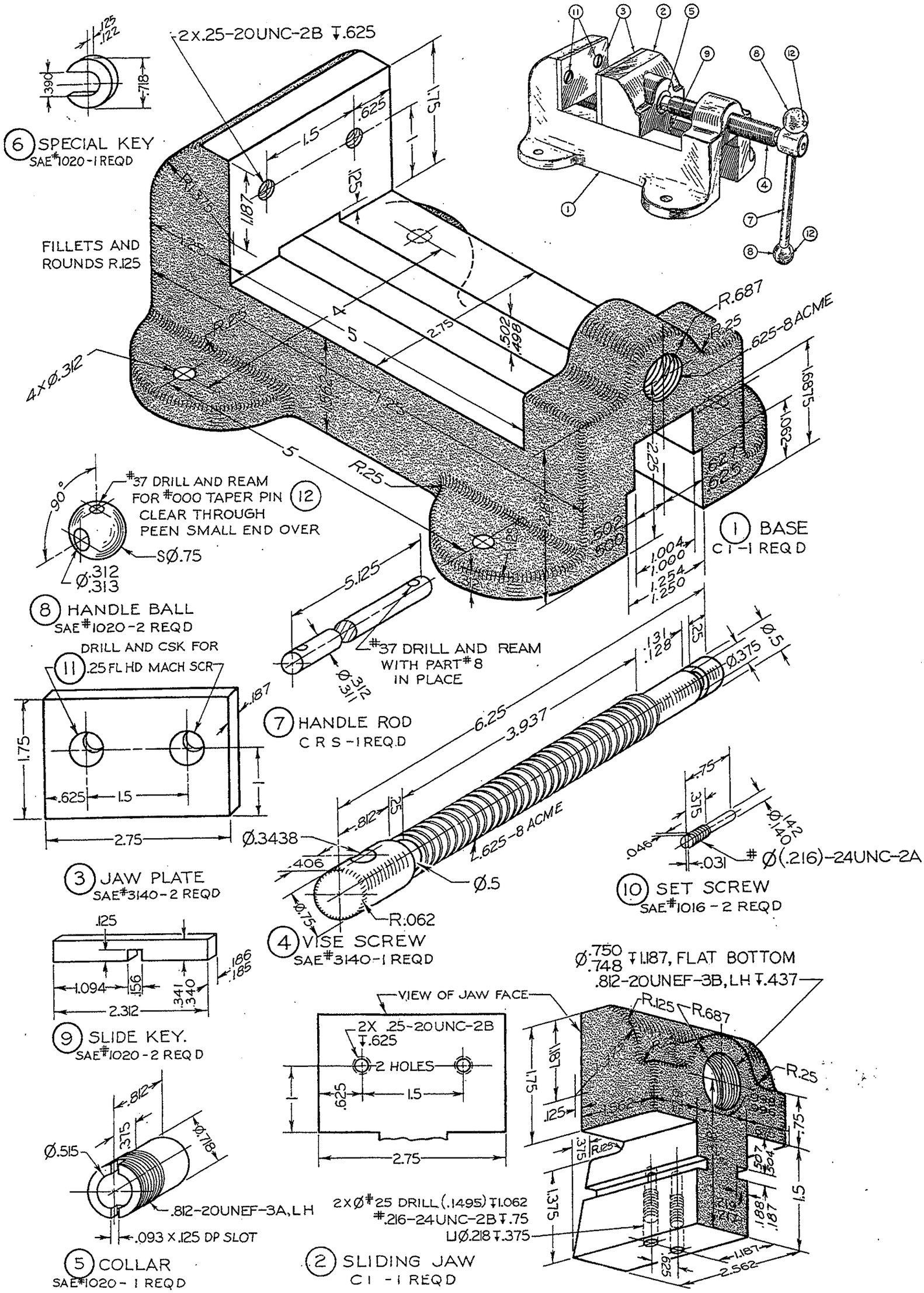

2X.25-20UNC-2B ↧.625
FILLETS AND ROUNDS R.125
4XØ.312
R.687
R.25
.625-8 ACME
1 BASE
C I -1 REQ D
#37 DRILL AND REAM FOR #000 TAPER PIN CLEAR THROUGH PEEN SMALL END OVER
SØ.75
Ø.312 .313
8 HANDLE BALL
SAE #1020-2 REQ D
#37 DRILL AND REAM WITH PART #8 IN PLACE
Ø.312 .311
7 HANDLE ROD
C R S -1 REQ.D
DRILL AND CSK FOR .25 FL HD MACH SCR
11
3 JAW PLATE
SAE #3140-2 REQD
Ø.3438
.406
Ø.5
R.062
4 VISE SCREW
SAE #3140-1 REQD
Ø.375
Ø.5
.625-8 ACME
Ø(.216)-24UNC-2A
10 SET SCREW
SAE #1016 - 2 REQD
9 SLIDE KEY.
SAE #1020 - 2 REQ D
Ø.515
.812-20UNEF-3A, LH
.093 X .125 DP SLOT
5 COLLAR
SAE #1020 - 1 REQ D
VIEW OF JAW FACE
2X .25-20UNC-2B ↧.625
2 HOLES
Ø.750 .748 ↧1.187, FLAT BOTTOM
.812-20UNEF-3B, LH ↧.437
2XØ#25 DRILL (.1495) ↧1.062
#.216-24UNC-2B ↧.75
⊔Ø.218 ↧.375
2 SLIDING JAW
C I -1 REQ D